蓝天机器人
BLUESKY ROBOT

Make Machines Work Better
for Customers'Wealth

Company Profile

Cooperated with Q&Q Drive Works Parts Inc., Canada

Smart Eco-friendly Efficient

CONTENTS

01 About the BlueSky

02 Product Introduction

03 Technological Advantages

04 40M Tunnel car wash machine

PART 01

关于蓝天

About the company

Company Profile

Enterprise Honor

Company Profile

蓝天机器人
BLUESKY ROBOT

Hunan Bluesky Robot Technology Co., ltd

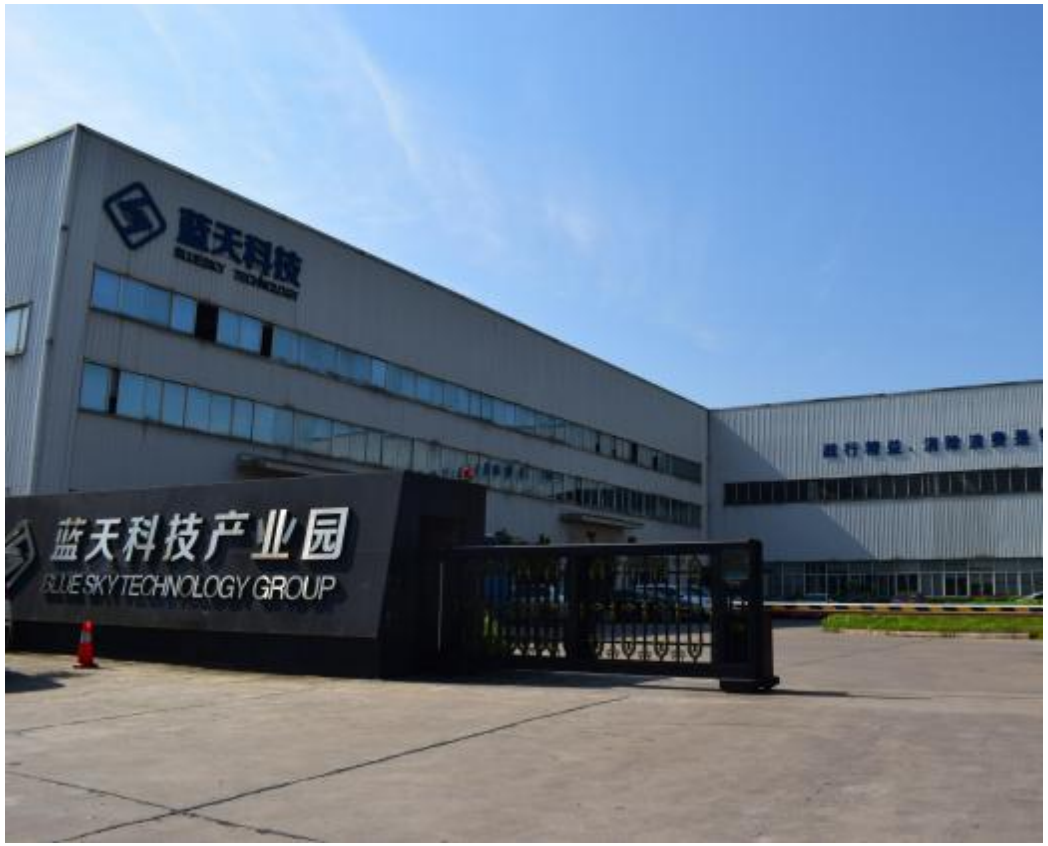

As a high-tech enterprise in Hunan Province which was **founded in 2007**, we represent a leading industrial robot system integrator and manufacturer of intelligent car washer in China. **Boasting14 years of intelligent equipment research and development experience and technical expertise**, we are the largest car washer manufacturer in Central South China, integrating research and development, manufacturing, sales and after-sales service.

As a professional developer and manufacturer of intelligent equipment in China, Bluesky Technology has been widely trusted by the market and users with our leading technology, reliable products and high-quality services. Our products have won more than **ten national and municipal awards and possess more than forty patents**. We are the leading player in the industry in terms of technical strength.

Bluesky Technology has established **the Institute of Intelligent Car Washing Equipment** in cooperation with domestic famous universities, which has developed into a first-class car washing machine research and development platform in China. Its products have been widely used in mainstream markets such as Sinopec (China Petrochemical Corporation), PetroChina (China National Petroleum Corporation) and CNOOC (China National Offshore Oil Corporation). Besides, this company has established extensive cooperation with private gas stations, car washing and detailer stores and integrated automobile repair shops all over the country. Bluesky Intelligent Car Washer has developed a comprehensive capacity of producing and selling more than 500 car washer units annually, making us one of the most influential car washer manufacturers in China.

Corporate culture

蓝天机器人
BLUESKY ROBOT

Hunan Bluesky Robot Technology Co., ltd

Company Vision	To become a world-class intelligent car washer manufacturer and service provider; To become a leading robot system integrator and precision manufacturer in heavy machinery industry
Company Mission	Make Machines Work Better for Customers'Wealth
Corporate Values	Customer first, embracing change, continuous improvement, contribution-oriented, fair and honest, and striving for the first place
Value Proposition	Gain customers with high-quality service and seek development with higher-quality service
Company Creed	Removing waste is the knack for leading the world
Professional Ethics	Follow instructions, create value, submit reports, and focus on self-growth

Production Base

Technology Centre

Located in No.58 Nanzhuyuan Road in the Changsha Economic and Technological Development Zone, Hunan Province, the factory covers an area of 33,000 square meters. This base is home to more than 60 professional R&D designers, including 5 R&D personnel with senior professional titles and 10 R&D personnel with master's degrees and above. Our company integrates R&D, manufacturing and economic and trade services as a modern high-tech enterprise.

Production Workshop

Production Workshop

蓝天机器人
BLUESKY ROBOT

Production Workshop

蓝天机器人
BLUESKY ROBOT

Testing and warehouse

蓝天机器人
BLUESKY ROBOT

科利尔为蓝天洗车机品牌

车间调试平台

仓库

调试平台

PART 02

产品介绍 Products

- Scope of Business
- Introduction of Car Washer

Business Scope of the Company

蓝天机器人
BLUESKY ROBOT

Bluesky Car Washer

Bluesky Automatic Intelligent Car Wash is renowned for specializing in the design, manufacture and sales of continuous tunnel car washes, gantry reciprocating car washes, rapid bus-type car washes and unattended/self-service car wash equipments.

01

Material Handling and Conveying

The material handling system is mainly used for material loading and unloading during the processing in factory workshops, material loading and unloading during the assembling process, material conveying, transferring and storage during the process.

02

Precision Manufacturing

Precision manufacturing mainly includes two major fields: precision and ultra-precision processing technology and manufacturing automation. It is not only a vital instrument for us to respond quickly to market demands, boost productivity and improve workplace conditions, but also an effective way to ensure product quality.

Robot Welding

Welding robots are industrial engaged in welding (including cutting and spraying), which are used in the field of industrial automation.

04

Product Types of Car Washes

蓝天机器人
BLUESKY ROBOT

Types of car washes

Tunnel car washes

Unmanned/self-service car washes

Reciprocating car washes

Since entering the intelligent car wash industry, Bluesky Technology has cooperated with Hunan University to establish the Institute of Intelligent Car Wash Equipment, which has served Sinopec, PetroChina, CNOOC, Beijing Supwave Quick Washing Team and other companies, and established extensive cooperation with private gas stations, car washing and detailing stores, car repair shops and other kinds of customers all over the country.

Case of tunnel car washer

蓝天机器人
BLUESKY ROBOT

Case of Unmanned car washer

蓝天机器人
BLUESKY ROBOT

Unattended car washer

Cases of reciprocating car washer

蓝天机器人
BLUESKY ROBOT

Reciprocating car washer

Project cases in Domestic Market

蓝天机器人
BLUESKY ROBOT

隧道式洗车机

Project cases in Overseas Market

蓝天机器人
BLUESKY ROBOT

无人值守洗车机

Notification of Winning Bid for Sinopec Project

蓝天机器人
BLUESKY ROBOT

入 围 通 知 书

湖南蓝天机器人科技有限公司：

在我公司组织的（重招）中国石化销售股份有限公司北京石油分公司2024年销售企业洗车机框架协议采购（北京石油牵头）所需的无人值守隧道机有人隧道式洗车机龙门往复式洗车机旗舰版龙门往复式洗车机标准版;无接触洗车机招标中（招标编号：WZ20240911A/B/C/D/E-2399-9706-B3），经评标委员会评审，确定贵公司为入围投标人第5 名。

入围货物：有人隧道式洗车机。请你公司依据入围通知书尽快与中国石化销售有限公司北京石油分公司签订合同。

中国石化国际事业有限公司
2024年11月15日

2024 Tunnel car wash Machines

入 围 通 知 书

湖南蓝天机器人科技有限公司：

在我公司组织的（重招）中国石化销售股份有限公司北京石油分公司2024年销售企业洗车机框架协议采购（北京石油牵头）所需的无人值守隧道机有人隧道式洗车机龙门往复式洗车机旗舰版龙门往复式洗车机标准版;无接触洗车机招标中（招标编号：WZ20240911A/B/C/D/E-2399-9706-B4），经评标委员会评审，确定贵公司为入围投标人第5 名。

入围货物：无人值守隧道机。请你公司依据入围通知书尽快与中国石化销售有限公司北京石油分公司签订合同。

中国石化国际事业有限公司
2024年11月15日

2024 Tunnel car wash Machines

Notification of Winning Bid for Sinopec Project

蓝天机器人
BLUESKY ROBOT

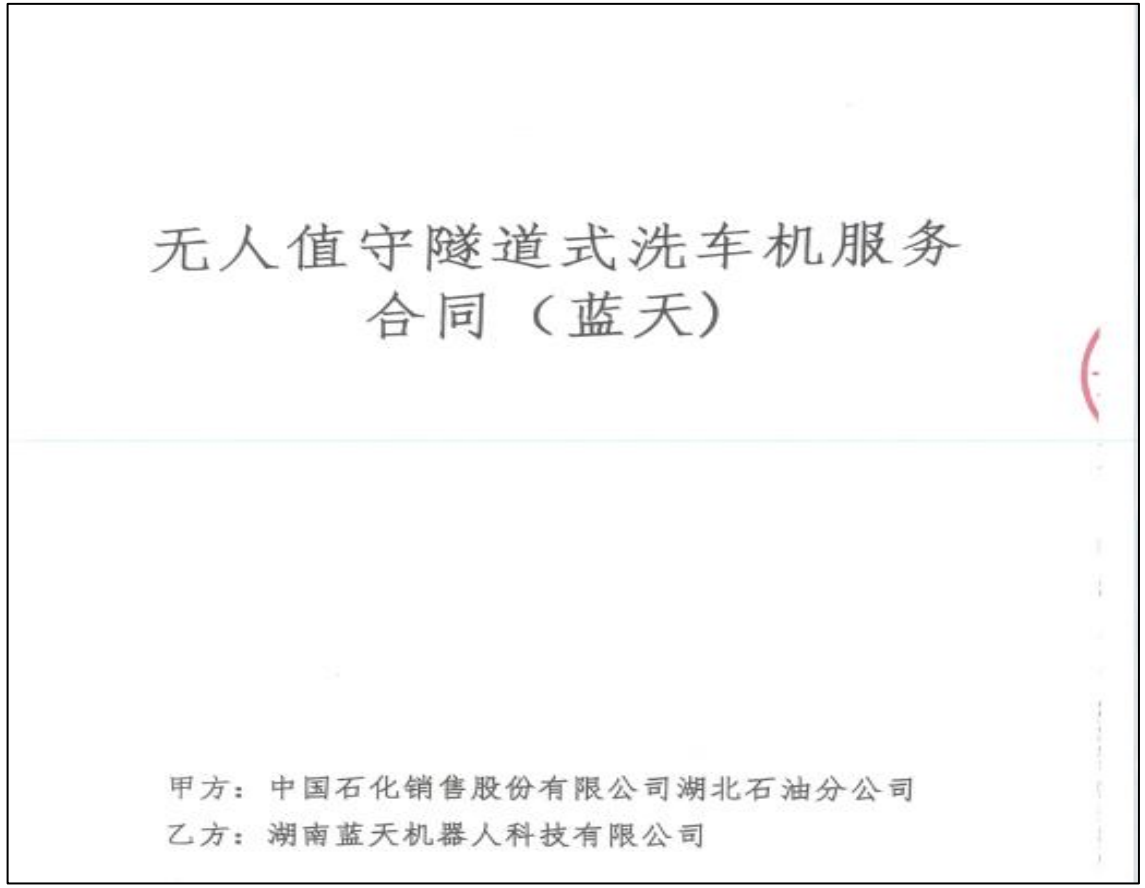

无人值守隧道式洗车机服务
合同（蓝天）

甲方：中国石化销售股份有限公司湖北石油分公司
乙方：湖南蓝天机器人科技有限公司

入围通知书

湖南蓝天机器人科技有限公司：

在我公司组织的江西石油2025年加油站洗车设备框架采购项目其他各种通用设备所需的其他各种通用设备招标中（招标编号：NWZ250620-2399-081815），经评标委员会评审，确定贵公司为入围投标人第1名。

入围货物：其他各种通用设备。请你公司依据入围通知书尽快与中国石化销售有限公司江西石油分公司签订合同。

中国石化国际事业有限公司
2025-7-18

招标专用章
(6)

2025 Tunnel car wash Machines

Notification of Winning Bid for CNPC Project

蓝天机器人
BLUESKY ROBOT

中标通知书

（招标文件编号：ZY19-SH05-WZ359）

湖南蓝天机器人科技有限公司：

你方于2019年8月22日所递交的《中国石油湖北销售公司加油站洗车设备供应商入围采购项目》（招标编号：ZY19-SH05-WZ359）投标文件综合评审排名第三，被确定为入围服务商。

中标价格：七刷洗车机单价：206000（含税，元，人民币）；五刷洗车机单价：196000（含税，元，人民币）

请你方在接到本通知书后尽快与招标人签订合同。

特此通知。

中国石油物资有限公司

（中国石油招标中心华东分中心）

2019年8月27日

入围通知书

（招标文件编号：ZY19-SH08-WZ373）

湖南蓝天机器人科技有限公司：

你方于2019年8月23日所递交的《中国石油天然气股份有限公司湖南销售分公司隧道式自动洗车机入围采购》（招标编号：ZY19-SH08-WZ373）的投标文件已被中国石油天然气股份有限公司湖南销售分公司接受，被确定为入围供应商。

中标价格：9刷隧道连续式电脑洗车机210000元/台；11刷隧道连续式电脑洗车机220000元/台。

注：实际采购量，以招标人采购订单或单次采购合同为准。

收到入围通知书后，尽快与中国石油天然气股份有限公司湖南销售分公司联系签订合同。

特此通知。

中国石油物资有限公司

2019年8月30日

中标通知书

（招标文件编号：ZY23-XN117-WZ0671）

湖南蓝天机器人科技有限公司：

依据评标委员会对《中国石油天然气股份有限公司四川销售分公司洗车设备采购》的评标结果，贵公司的投标被接受，中标价格为：141425元，含13%增值税，此价格为评标价：Σ（物资单价*采购频次），具体分项单价详见投标文件。请根据招标文件约定和投标文件内容，及时与中国石油天然气股份有限公司四川销售非油品分公司签订合同。联系人：李女士，电话：02886195531。

中国石油招标中心西南分中心

2023年12月7日

2019-2025

Notification of Winning Bid for CNPC Project

蓝天机器人 BLUESKY ROBOT

中国石油物资上海有限公司

收件人：何治　电话：18975149791　传真：

发件人：艾希美　电话：18917163489　传真：

主题：中标通知书　日期：2023 年 12 月 19 日

项目名称：中石油福建销售公司自动洗车机框架采购项目（二次）
招标编号：ZY23-SH17-WZ059C

中 标 通 知 书

湖南蓝天机器人科技有限公司：

依据评标委员会对中石油福建销售公司自动洗车机框架采购项目（二次）评标结果，贵公司的投标以综合得分次高被接受。确定贵公司为本次招标的备选供应商，中标价格：往复式洗车模式为 245000 元/台、通过式洗车模式为 420000 元/台，含 13%增值税。

按照本项目招标文件及相关补充文件规定，招标人确定前两名的中标候选人为中标人，排名第一名的中标人为实际供应商，排名二名的中标人为备选供应商，备选供应商不保证份额，当第一名在实施过程中无法满足技术要求的情况下递补。

请贵公司收到中标通知书后，尽快与中国石油天然气股份有限公司福建销售分公司在规定的时间内完成合同签订。

顺致良好祝愿！

中国石油物资上海有限公司

2023 年 12 月 19 日

中国石油物资有限公司西安分公司

收件人：湖南蓝天机器人科技有限公司　电话：
发件人：中国石油物资有限公司西安分公司　电话：

中 标 通 知 书

湖南蓝天机器人科技有限公司：

依据评标委员会对 陕西销售分公司加油站洗车机设备采购招标（定商定价）一标段 （招标编号 ZY23-XA312-WZ1044 ）评标结果，贵公司的投标以 综合评价 最优被接受，确定贵公司为本次招标的中标人，中标价格为：1070600元

招标结果有效期：自中标通知书发放之日起5年。

请贵公司收到中标通知书后，尽快与 陕西销售分公司 在规定的时间内完成合同签订。

顺致良好祝愿！

中国石油物资有限公司西安分公司（盖章）

2023 年 12 月 27 日

中国石油物资沈阳有限公司

收件人：湖南蓝天机器人科技有限公司　电话：　传真：

发件人：郭通博　电话 TEL：024-82656513　传真：

主题：中标通知书　日期：2024 年 9 月 20 日

项目名称：中国石油辽宁销售分公司 2024 年洗车设备采购

招标编号：ZY24-SY32-WZ012

中 标 通 知 书

湖南蓝天机器人科技有限公司：

依据评标委员会对中国石油辽宁销售分公司 2024 年洗车设备采购评标结果，贵公司的第一标段投标以综合评分第一被接受，确定贵公司为本次招标第一标段的中标人，中标金额为（含 13%增值税）：隧道式洗车机单价 24.5 万元/台（大写：贰拾肆万伍仟元每台）；往复式洗车机单价 18.7 万元/台（大写：壹拾捌万柒仟元每台）；无接触洗车机单价 13 万元/台（大写：壹拾叁万元每台）。

请贵公司收到中标通知书后，尽快与中国石油天然气股份有限公司辽宁销售分公司在规定的时间内完成合同签订，联系人牛宇璇，电话 18642907272，并按照招标文件要求与本公司签订中标服务费协议。

顺致良好祝愿！

中国石油物资沈阳有限公司

2024 年 9 月 20 日

中标通知书

编号：TZSXJW240664

项目名称	中石油新疆销售有限公司2024-2026年度洗车设备集中采购项目			
招标项目编号	ZY24-XJX16-WK019-00			
中标单位	湖南蓝天机器人科技有限公司			
标段/标包	中石油新疆销售有限公司2024-2026年度洗车设备集中采购项目	单价	896000	
招标单位信息	单位名称	中石油新疆销售有限公司综合事务保障中心		
	联系人	余雁行	联系电话	0991-6600911
合同签订	接到中标通知书之日起30日内签订合同			
备注				

中国石油物资有限公司（新疆分公司）

2024年09月04日

2023-2025

PART 03

技术优势

Technical advantages

Technical Advantages-Introduction of Key Technicians

蓝天机器人
BLUESKY ROBOT

Located in Changsha, the capital of construction machinery, Bluesky Robot Technology Co., Ltd. Boasts abundant experts and talents in mechanical design, manufacturing and technology.

The core personnel are high-end talents with rich working experience in the top 50 construction machinery in the world, such as Zoomlion, Sany, Sunward and China Railway Construction Heavy Industry Limited. They are senior experts in the car washing machine industry.

Huanghaibo, Tech General Manager

He has been engaged in mechanical design for 26 years. As a director of Bluesky Car Washer Intelligent Equipment Research Institute, he has made outstanding achievements in unattended system of automatic car washer, obtained national patents for many technologies, and conducted in-depth research on car washer design and manufacture. He is a senior design expert in car washer industry.

Yu Dongping, Chief Engineer

He has been engaged in mechanical design for 38 years, organized and designed three-brush reciprocating machine, five-brush automatic and unattended car washer, three-stage pneumatic tunnel washing machine, pass-through bus-type washer, and 8.7-meter tunnel machine and other models. He has a profound expertise in design.

Tuo Xikai, Mechanical Designer

He has been engaged in car wash design for 8 years, and is the director of Intelligent Car Washing and Assembly Institute, mainly developing and designing five-brush pneumatic reciprocating washing machine, 3.4m reciprocating machine for stores, pass-through bus-type washing machine and other models. He applied many of our patents to car washers.

Luo Hao, Electrical Engineer

He works as a car washer programmer, engaged in mechanical design for nearly 8 years. He has been engaged in electrical control design for a long time, and now is responsible for the program design of all car washers. He participates in the development of many patents. He is an expert in electrical field.

Patent Certificate

…

More than 40 invention patents and utility model patents

Enterprise Honor

蓝天机器人
BLUESKY ROBOT

The company has passed the certification of ISO9001 quality certification system， environmental management system and occupational health management system, etc.

In 2012, we were awarded the title of high-tech enterprise, and have won more than ten national and provincial awards and more than 40 patents.

Technical Advantage-Advanced Production and Testing Equipment

蓝天机器人
BLUESKY ROBOT

Thanks to years of service to the world leader in industrial automation, Bluesky Robotics is one of the few companies in the car washing industry with the ability to process precision parts, which will ensure the quality of Bluesky car washes and increase the speed of product innovation. The following are some production and testing equipments:

Shot blasting machine

Paint room

Vertical machining center

Numerical control lathe

milling tool machine

Paint room

Shot blasting machine

Numerical control vertical machining center

milling tool machine

Vertical machining center

All the production and inspection equipments listed above belong to Bluesky Robot Technology Co., Ltd., and are used for the production and manufacture of car washing machines.

Technical Advantage-Perfect Quality Control and Guarantee Measures

蓝天机器人 BLUESKY ROBOT

Quality is the key to measure a device, and at the same time, it also serves as the life of an enterprise. In order to ensure the quality of products, our company has perfect quality assurance measures and strict quality control process for the higher quality of our car washing equipment.

Ensure that "no defective products are manufactured, received or delivered" in every manufacturing process, and change the post control into the management mode of pre-prevention, in-process control and post summary, so as to realize the process quantity control goal of "zero defective product circulation".

湖南蓝天机器人科技有限公司
HUNAN BLUE SKY ROBOT TECHNOLOGY CO.,LTD

洗车机质量控制程序文件

一、 监视和测量控制程序
二、 不合格品控制程序
三、 纠正与预防措施控制程序

蓝天机器人 品质决定成败

洗车机质量问题月度汇报 2020年洗车机TOP质量问题统计表

类别	频次 / 月份	1月	2月	3月	4月	5月	6月	7月	8月	9月	10月	11月	12月	合计	备注不良情形
往复机和壁道机	保养培训	/	/	4	3	4	2	1	0	1	0	1	1	16	客户机器未定期保养。
	电机	/	/	1	2	1	2	1	0	0	0	0	0	7	早期电机防水等级不够，电机进水烧坏。
	立刷	/	/	1	2	1	0	0	0	0	1	0	0	5	缓冲块材料磨损，现已更换材硬度。
	顶刷	/	/	2	3	1	0	1	0	0	0	1	0	8	顶刷布带子扭曲。
	行程开关	/	/	1	2	3	1	1	1	0	1	0	0	10	早期行程开关防水等级不够烧坏，防水行程开关内部卡死。
	接近开关	/	/	2	0	2	1	1	2	1	0	0	0	9	接近开关早期劳易测品牌缺陷，现已更换防水等级高的品牌。
	横梁胶轮	/	/	1	2	1	1	0	1	0	1	0	0	7	工业版立刷横梁上面的胶轮轴承损坏，设计结构已改善。
	语音播报	/	/	0	2	2	3	1	0	0	0	0	0	8	语音不播报喇叭烧掉，优化音频文件后已改善。
	空压机	/	/	0	0	1	2	1	0	1	0	0	0	5	客户空压机未定时排水造成气压低、气管破损。
	潜水泵	/	/	0	2	1	0	1	0	2	0	0	0	6	水循环自带的泵质量差，进水烧坏，已改为司内自配发货。
	电磁阀	/	/	1	0	0	0	1	1	0	0	1	0	4	水路电磁阀进水短路，设计调整止逆阀装配位置，避免漏水。
	链条	/	/	1	3	1	0	2	1	3	1	1	2	15	机器长时间运行，客户未及时打黄油保养处理。
	汇总	/	/	14	21	18	12	11	6	8	4	4	3	101	

Bluesky Intelligent Car Washer is committed to quality improvement measures. We summarize the quality problems of car washer put into operation in the market every month, and insist on continuous improvement, ensuring the stability and reliability of products, and controlling the overall failure rate within 0.2%.

Technical Advantage-Antirust Ability

蓝天机器人
BLUESKY ROBOT

Car washers generally work in outdoor and humid conditions, which requires high antirust performance of products. So for the surface treatment is the key procedure of the manufacturing process of car wash products. Our company has made the following process to prevent car washing machine from rusting.

A: **Galvanizing process:**

Process: Degreasing and derusting-washing with water 1-washing with water 2-dipping zinc cosolvent-drying for preheating-hot dip galvanizing-cooling-passivation-rinsing-drying-inspection

Standard for hot dip galvanizing
GBT13912-2002

Standard for galvanizing

GB/T2828-2003

Company advantages:

1. Industrial robot Experience: Over 15 years of automation integration experience, welding/precision control technology.Most components are self-manufactured, quality is controllable, and equipment stability is strong. The company is not just a simple assembly manufacturer ,We are a strong company with deep mechanical design + electric control system integration +process planning capabilities.

2. Strong R&D strength and patents: Collaborating with universities, holding over 40 national patents, co-establishing an intelligent car wash equipment research institute with Hunan University.

3. High-end manufacturing and quality control philosophy: Key components such as imported foam brushes (which do not damage paint), Siemens/Delta electric control, low failure rates. The company adheres to the manufacturing philosophy of "winning by quality" and "making durable equipment."

4. Strong customization capabilities: Adjustable width and size with various specific requirements, adaptable to different vehicle models and sites.

5. Clear market positioning: The company clearly serves professional investors and large car wash chain brands with high demands for equipment reliability, car wash quality, long-term operating costs, and value-added services, suitable for the mid-to-high-end commercial market.

https

Part 4. Introduction of 40M Tunnel Car Wash Machine

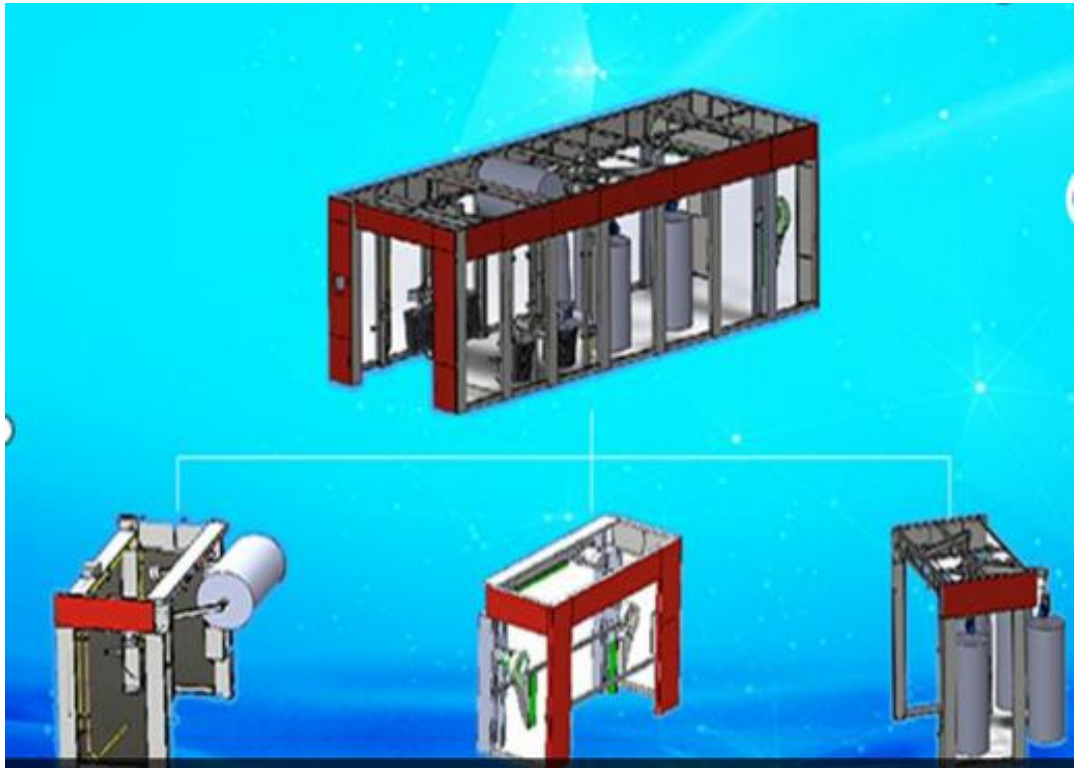

Tunnel car wash(er)-advantages and characteristics

蓝天机器人
BLUESKY ROBOT

01

Improve efficiency: Efficient car washing Speed (less than 3 min/car), saving customers a lot of time.

02

Adopt international leading technology and fully modular design. Different modules can be combined to meet different need.

03

The electrical components from imported foreign well-known manufacturers are used to ensure safety and reliability.

04

Adopt the most cutting-edge polyethylene foam brush in the world, with no damage to car paintwork high cleansing effect.

05

Adopt large-area glass modeling, Making it magnificent. Besides, the internal structure, and car washing process is clear at a glance.

06

Bright and large touch operation display with full English language.

07

Adopt international mainstream high-pressure plunger pump system to supply pressure. Its well-developed data system can calculate the daily car wash volume and total car wash volume.

Design Overview

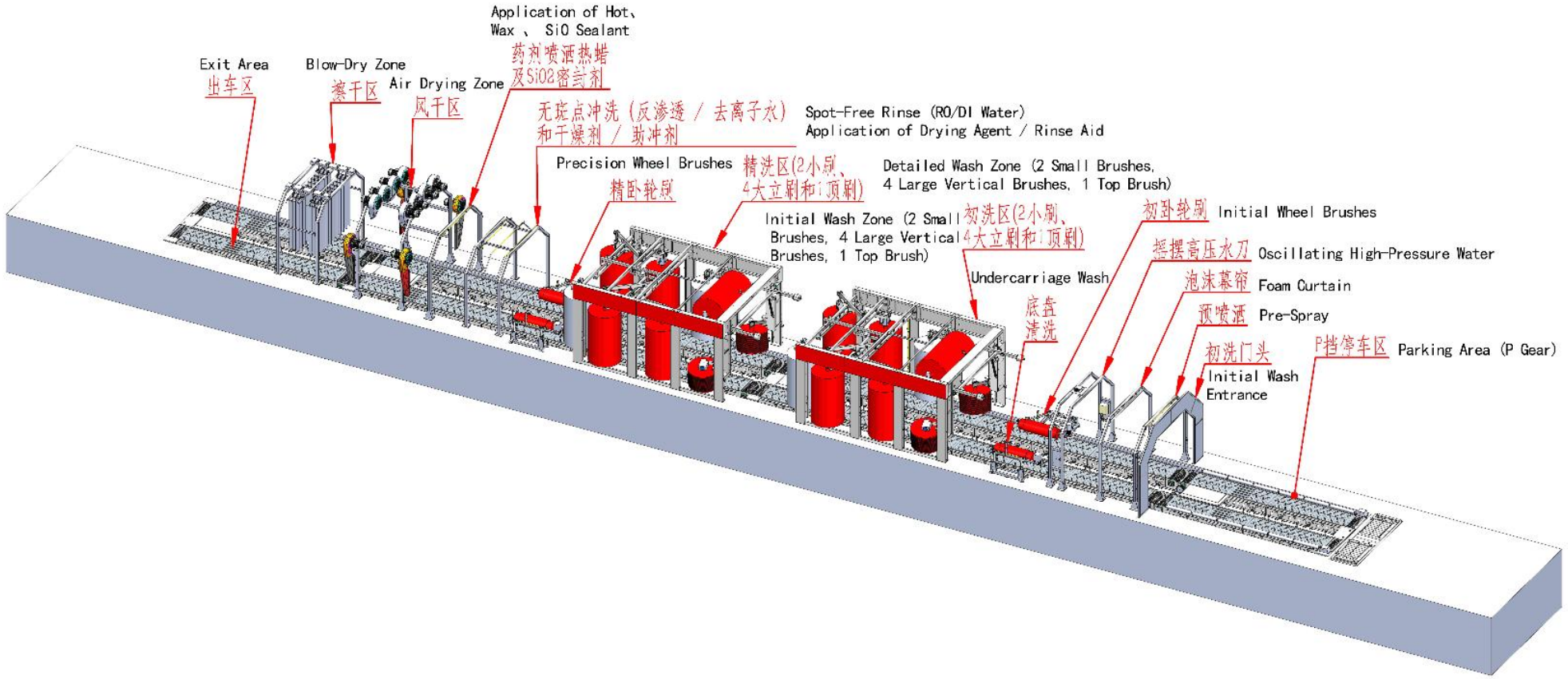

Specifications & core systems

蓝天机器人
BLUESKY ROBOT

Specifications:

MACHINE SIZE (L*W*H)	40000x5000x4000mm
Available size for bus	5500x2000x2000mm （Customization is acceptable）
Available car to wash	Car / SUV
Washing time	1-2Mins/Car
Car wash capacity	30-60Cars/hour
Mains voltage	3PHASE AC380V /50HZ
Total power	128KW
Water/electricity consumption	220L/car,2.5kWh /car
Shampoo consumption	25ml/Car
Wax/polish consumption	25ml/Car

Parts	Qty (set)
spot-free rinsing and drying spraying devices	1
waterfall spraying devices	1
bottom rinsing devices	1
wheel cleaning devices	2
body initial/final brushing devices	2
swinging high-pressure water devices	1
pre-spraying/chemical spraying devices	2
pre-spraying/chemical spraying devices	1
Dring devices	1
water supply pump equipment	1
liquid level meter equipment	1
plate chain conveying equipment, control equipment, and compressed	1
pre-spray/chemical spray equipment	1
plate chain conveying equipment	1
Control System	1

4.1 Spot-Free Rinsing and Drying Spraying Equipment

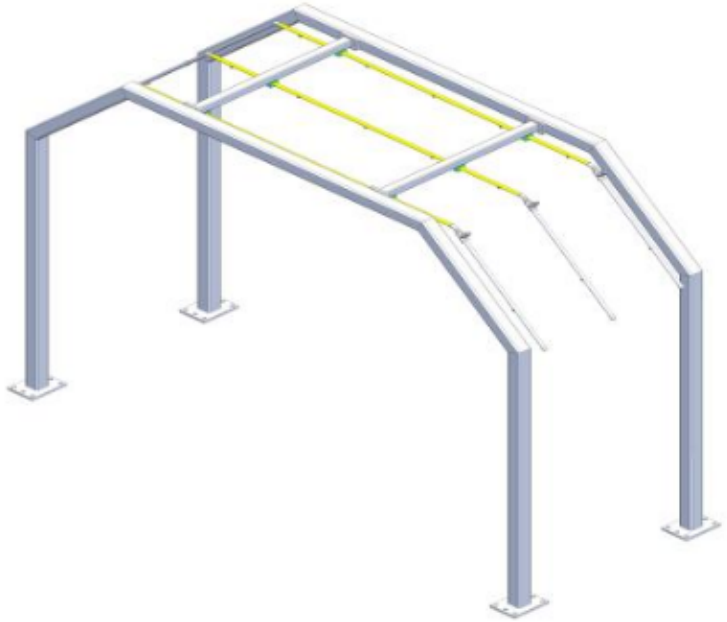

The spot-free rinsing and drying spraying equipment consists of installation frame, spot-free rinsing pipeline, and drying spraying pipeline.

The installation frame is made of high quality steel, treated with hot-dip galvanization and spray paint for corrosion resistance, ensuring high structural strength and good rust resistance. It is used to fix the vehicle entrance photoelectric sensor, top washing pipeline, and side washing pipeline. The top washing pipeline and side washing pipeline are made of seamless steel pipes, drilled, and then installed with stainless steel nozzles and joints.

When the vehicle is driven through this equipment by the chain, the vehicle entrance photoelectric sensor detects the vehicle, the water pump starts, and the solenoid valve opens the top spot-free washing pipeline and the top drying agent spraying washing pipeline to wash the vehicle body simultaneously.

4.2 Waterfall Spraying Equipment

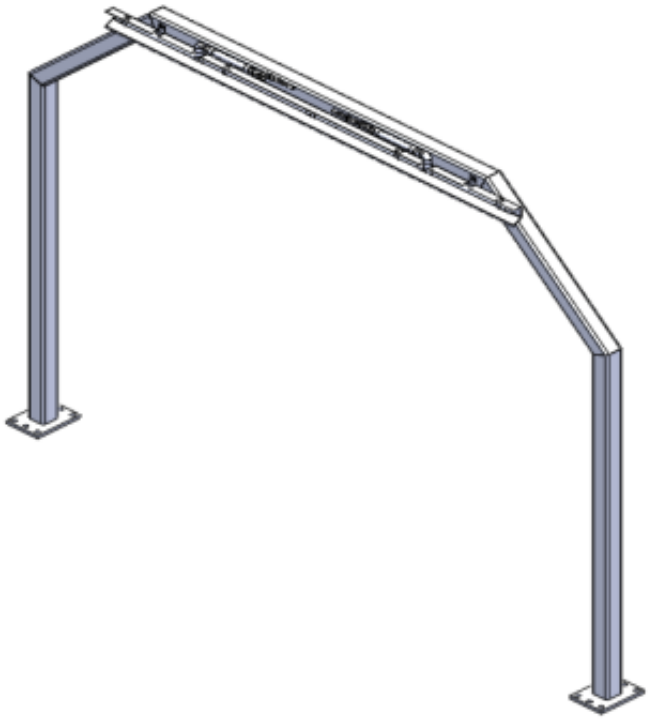

The waterfall spraying equipment consists of columns and waterfall spraying pipeline nozzles. The columns are welded with standard steel and treated with hot-dip galvanization and spray paint for corrosion resistance.

The waterfall spraying is mainly used to evenly spray foam liquid onto the outer surface of the vehicle, allowing the dirt on the surface to react with the foam liquid to enhance the cleaning effect.

4.3 Bottom Washing Equipment

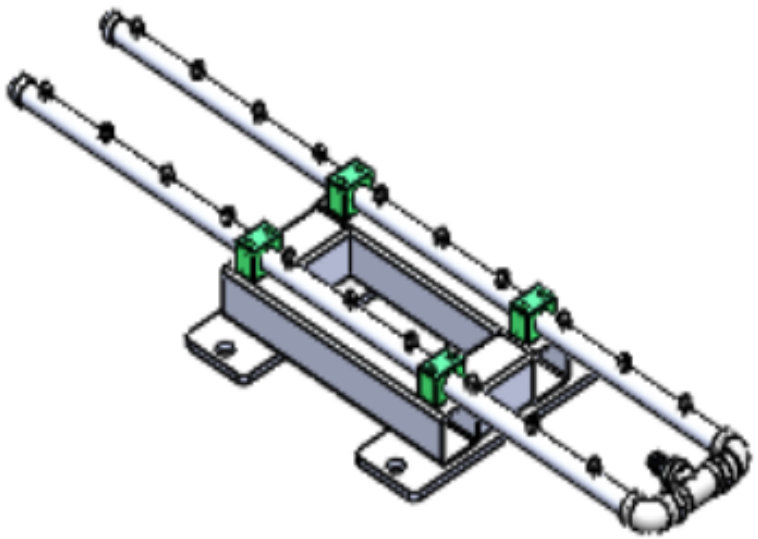

The bottom washing water pump consists of a mounting base, water pipes, and nozzle pipe clamps. When the vehicle is driven through this equipment by the chain, the photoelectric sensor detects the vehicle, and the water pump starts, opening the solenoid valve to wash the vehicle's chassis.

Technical Parameters

Number of Nozzles	Not less than 20
Nozzle Flow Rate	5L/min

Detailed Description of the Equipment

蓝天机器人
BLUESKY ROBOT

4.4 Wheel Cleaning Equipment

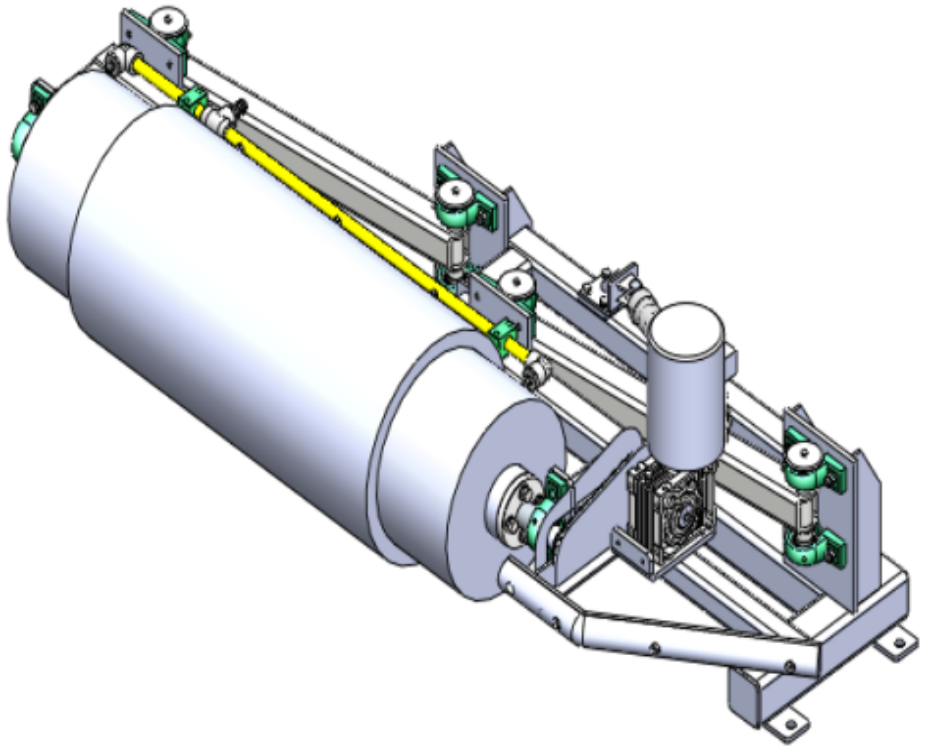

Wheel cleaning equipment consists of a base, connecting part, cylinder, motor, sensor, brush, and washing pipeline. Both the base and connecting part are welded from standard steel and undergo electrophoretic spraying for corrosion protection. Short nylon bristles are used to clean the wheel rims. The short nylon bristles can deeply clean the sludge from the vehicle's wheel rims without damaging the paint on both sides of the vehicle, and they are less likely to trap sand and mud under centrifugal force. The wheel cleaning equipment uses imported double-thrust linear cylinders for more stable operation, longer lifespan, and better cleaning results.

Detailed Description of the Equipment

蓝天机器人
BLUESKY ROBOT

4.5 Body Initial and Precision Washing Equipment

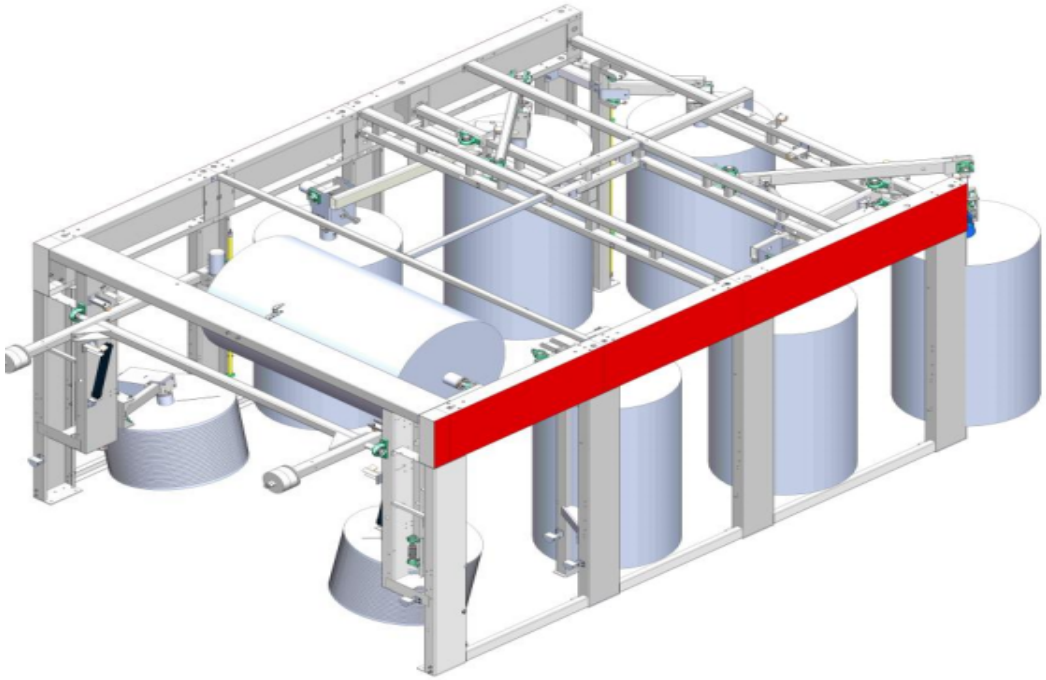

The body initial and precision washing equipment consists of a frame, top brushes, small brushes, large vertical brushes, and spray piping. The frame and supports of top brushes, small brushes, and large vertical brushes are made of high-quality steel, providing high structural strength and good rigidity. The surface undergoes anti-corrosion treatment, achieved through hot-dip galvanization followed by painting for corrosion resistance. The spray pipes and nozzles are made of stainless steel.

The top brush, small brush, and large vertical brush use a rotating bristle cleaning method to scrub the dirt on the vehicle's exterior surface. They are directly connected to the motor reducer with the brush shaft, fixed on the top brush, small brush, and large vertical brush supports using bearings. The lifting of the top brush and the swinging of the large vertical brush are driven by cylinders. The amount of bristle engagement is controlled by the pressure of the cylinders. There are safe and reliable mechanical buffers at the maximum working position and retracted position to limit the rotational swing range of the brush shaft.

Detailed Description of the Equipment:Brush control system

蓝天机器人
BLUESKY ROBOT

A variable frequency drive (VFD) to control brush bristles(not by contactor control)

As far as we know, few manufacturers that replaces contactors with frequency converters. At present, our products have been widely welcomed in areas like Xinjiang where after-sales maintenance is very inconvenient, and we are the car washing machine manufacturer with the most bids in Xinjiang in recent years.

1.Achieving precise speed control and stepless speed regulation

A variable frequency drive can continuously and smoothly adjust the motor speed, allowing the movement speed of the brush bristles (such as up and down, front and back) to be finely tuned according to the vehicle model, cleaning area, or level of dirt. In contrast, a contactor can only switch the motor on or off, making it impossible to control speed, resulting in abrupt movements of the brush bristles and poorer cleaning effectiveness and safety.

2.Reducing mechanical shock and extending equipment lifespan

A variable frequency drive features "soft start" and "soft stop" functions, which gradually increase or decrease the motor frequency, ensuring a smooth start and stop process for the brush bristles. This significantly reduces the impact and wear on mechanical structures (such as the gantry, drive belts, and brush bristle supports). A contactor directly connects and disconnects the motor, causing strong mechanical shocks that accelerate equipment aging and increase maintenance costs over time.

3.Enhancing cleaning effectiveness and intelligence level

With a variable frequency drive, a car wash machine can achieve complex motion trajectory control, such as automatically adjusting the movement range and pressure of the brush bristles based on sensor feedback, enabling "simulated brushing" to ensure thorough cleaning without dead angles. This represents a qualitative improvement in intelligence and cleaning quality compared to the fixed, singular motion mode controlled by a contactor.

4.Improving energy efficiency and stability

A variable frequency drive can dynamically adjust the motor output power based on load requirements, preventing the motor from running at full speed when it is unloaded or lightly loaded, thus saving energy. Additionally, the high starting torque and overload capacity of the variable frequency drive ensure that the brush bristles can continue to operate stably even when encountering resistance (such as stubborn dirt), making it less likely to stall. 12

5.Supporting system integration and remote monitoring

Modern variable frequency drives typically support communication protocols like Modbus, allowing seamless connection with PLCs and Internet of Things (IoT) systems for unattended operation, remote monitoring, and fault diagnosis of the car wash machine. In contrast, a contactor, as a simple switching component, cannot provide any data feedback and is difficult to integrate into intelligent control systems.

In summary, although contactors may be lower in cost, their functionality is limited and control is rough. For car wash brush systems that require precise control, high reliability, and intelligence, variable frequency drives represent a more advanced, efficient, and reliable control solution.

4.6 Swing High-Pressure Water Washing Equipment

The high-pressure washing equipment consists of an installation frame, left and right swinging water jets, and a top swinging water jet. The installation frame is welded from standard steel and treated with hot-dip galvanization and painting for corrosion resistance,which is used to install water jets. The water jets are composed of swinging nozzles, connecting rods, and a driving motor reducer.

The high-pressure water equipment mainly uses swinging high-pressure water to wash away dirt on the vehicle's surface to improve the cleaning effect.

Detailed Description of the Equipment

蓝天机器人
BLUESKY ROBOT

4.7 Pre-Spray/Chemical Spray Equipment

The pre-spray/chemical spray equipment consists of a top spray pipeline and side spray pipelines mounted on vertical columns. The columns are welded with standard steel and treated with hot-dip galvanization and painting for corrosion resistance. They serve to fix the top spray pipeline and side spray pipelines. The top spray pipeline and side spray pipelines are made from seamless steel pipes, drilled and installed with stainless steel nozzles and fittings.

The pre-spray equipment mainly uses chemicals to react with the dirt on the vehicle's surface to enhance the subsequent cleaning effect.

The chemical spray equipment mainly uses car wax, hot wax, and SiO2 sealants to protect the vehicle's surface, achieving an improved shine effect.It's also freedom in chemical selection.

4.8 High Wind Drying Component

The strong wind sweeping equipment consists of a connecting frame and a fixed blowing component. The connecting frame is made of high-quality steel, with high structural strength and good rigidity.

The strong wind sweeping equipment is used for dewatering the surface of the vehicle, accelerating the drying speed of the vehicle surface and improving work efficiency. The strong wind sweeping station is composed of strong wind sweeping equipment installed on both sides. When the vehicle passes through, the equipment is activated to blow dry.

4.9 Swing Drying Equipment

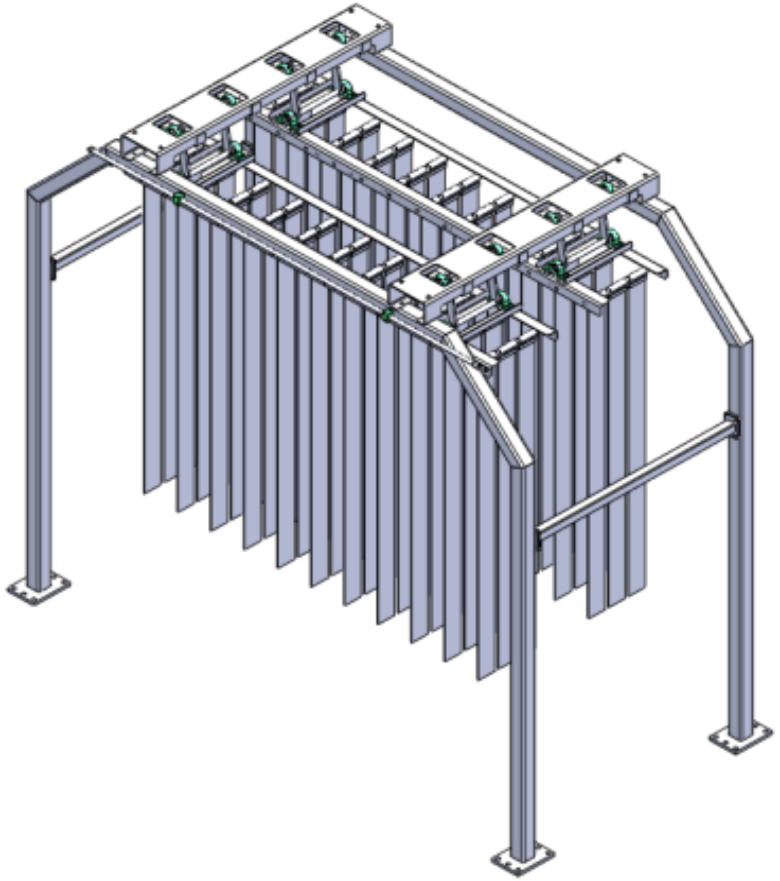

The swing drying equipment consists of an installation frame, suede, a connecting base, a cylinder, bearings, and a swing frame. The metal parts are all made of high-quality steel with high structural strength and good rigidity. The surface undergoes anti-corrosion treatment, achieved through hot-dip galvanizing followed by painting for corrosion resistance. The cylinder uses a double-push linear drive for more stable operation and longer lifespan, and both the spray pipe and nozzles are made of stainless steel.

4.10 Water Supply Equipment

The clean water supply system consists of a water tank, pump, piping, valves, pressure gauges, and level controllers. The water supply equipment is used to provide automatic water supply for the fully automatic car wash machine.

4.11 Detergent Supply Equipment

The detergent supply equipment is used to provide detergent for the car wash, with the dosage adjustable according to actual conditions. The metering pump is controlled by an electrical control box to supply detergent through pipes to various car wash brushes, and it has the capability to freely adjust the detergent concentration.

4.12 Compressed Air Supply Equipment

The compressed air supply equipment provides sufficient compressed air for all pneumatic operating components, meeting the continuous operational needs of all pneumatic parts. This equipment consists of an air compressor, air piping, solenoid valves, and pneumatic actuators.

4.13 Level Gauge Equipment

Level gauge equipment measures the water level for limit measurement and provides trigger signals.

Core advantages of the tunnel car wash machine

蓝天机器人
BLUESKY ROBOT

The 40 Meters tunnel car wash machine is built on the foundation of "industrial-grade reliability," aiming for "excellent cleanliness and maintenance effects," dedicated to providing customers with high-end commercial equipment and long-term stable returns.

Reliable and durable for the quality: The Siemens/Schneider electric control system combined with a fully hot-dip galvanized anti-corrosion body for the long-term stable operation of the equipment, greatly reducing failure rates and maintenance costs, ensuring investment safety.

Deeply cleaning: From the chassis to the wheel hub, from the car body curves to the gaps, we designed such as swinging high-pressure washing, dedicated wheel hub brushes, and advanced drying system, achieving cleanliness and drying effects.

Value extension: The integrated multi-chemical spraying system provides operators with an upgrade path from basic cleaning to beauty maintenance services, helping to enhance the per-customer value.

Intelligent, efficient and saving labor cost: Fully automatic sensing operation and an efficient drying system maximize vehicle throughput efficiency and operational efficiency, ensuring effectiveness, reducing reliance on labor operation,achieve unmanned operation.

Super high cost-performance: Compared to imported brands, prices are 30%-50% lower ; compared to domestic brands, our car washing machine offers higher stability and lower failure rates, with strong R&D capabilities and better scene adaptation.

Market & Cooperated brands

蓝天机器人
BLUESKY ROBOT

Some cooperative brands

中国石油 | 中国石化 SINOPEC | 中国海油 CNOOC

SHELL | Mobil 美孚 | TOTAL 道达尔

Some cooperative 4S stores

NISSAN